Optinet Technology Co., Ltd
Add: 4th Floor Xiufeng Industrial Park, Buji Street, Longgang District, Shenzhen,China 518112
Tel: +86-755-28471034 Fax:+86-755-61824579
www.optinetec.com sales@optinetec.com

OP-QSFP28-SR4

100G QSFP28-SR4 850nm MPO

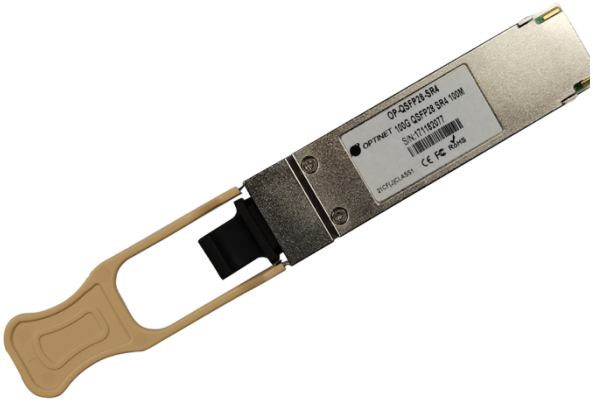

Features

- Hot-pluggable QSFP28 form factor
- Supports 103.1Gb/s to 112.2Gb/s aggregate bit rates
- Power dissipation < 3.5W
- RoHS-6 compliant
- Commercial case temperature range of 0°C to 70°C
- Single 3.3V power supply
- Maximum link length of 100m on OM4 Multimode Fiber
- 4x25Gb/s 850mm VCSEL-based transmitter
- 4x25G electrical interface
- Single MPO12 receptacle
- I2C management interface

Application

- 100GBASE-SR4 100G Ethernet
- 128G Fiber Channel
- 4x28Gb/s Multimode OTN

Overview

OPTINET's 100G QSFP28-SR4 transceiver modules are designed for use in 100 Gigabit Ethernet, 128GFC and 4x28G OTN client links over multimode fiber. They are compliant with the QSFP28 MSA 128GFC and IEEE 802.3bm 100GBASE-SR4 and CAUI-4. Digital diagnostics functions are available via the I2C interface as specified by the QSFP28 MSA.

Absolute Maximum Ratings

Parameter	Symbol	Min.	Typical	Max.	Unit	Notes
Storage Temperature	T_S	-20	-	+85	°C	
Supply Voltage	V_{CC}	-0.3	-	+3.6	V	
Case Operating Temperature	T_{OP}	0	-	70	°C	
Operating Relative Humidity	RH	-	-	+85	%	
Receiver Damage Threshold, per Lane	PR_{dmg}	5.5	-	-	dBm	

Recommended Operating Conditions

Parameter	Symbol	Min.	Typical	Max.	Unit	Notes
Operating Case Temperature	T_C	0	-	+70	°C	
Power Supply Voltage	V_{CC}	3.13	3.3	3.47	V	
Aggregate Bit Rate	BR_{AVE}	103.1	-	112.2	Gb/s	
Lane Bit Rate	BR_{LANE}	25.78	-	28.05	Gb/s	

Humidity	Rh	5	-	85	%	
Fiber Bend Radius	Rb	3	-	-	cm	

Optical Characteristics

Parameter	Symbol	Unit	Min	Typ	Max
Bit Rate	BR	Gbps	10.3125	25.78125	-
Center Wavelength Range	λc	nm	830	850	870
RMS Spectral Width	Δλ	nm	-	-	0.65
Average Launch power Tx_off	Poff	dBm	-	-	-30
Launch Optical Power	P_0	dBm	-6.0		
Extinction Ratio	ER	dB	2	-	-
Bit Rate	BR	Gbps	10.3125	25.78125	-
Sensitivity@BER=E-12	BER	dBm	-	-	-5.2
Sensitivity@BER=5E-5	BER	dBm	-	-	-10.3
Overload Input Optical Power	P_{IN}	dBm	2.5	-	-
Center Wavelength Range	λc	nm	820	-	880
LOS Assert	-	dBm	-30	-	-
LOS De-Assert	-	dBm	-	-	-12
LOS Hysteresis	-	dB	0.5	-	-

Electrical Characteristics

Parameter	Symbol	Min.	Typ.	Max.	Units
Input Logic Level High	V_{IH}	2.5	-	V_{CC}+0.3	V
Input Logic Level Low	V_{IL}	0	-	0.8	V
Output Logic Level High	V_{OH}	2.4	-	V_{CC}	V
Output Logic Level Low	V_{OL}	0	-	0.4	V
Differential Data Input Swing	$V_{in,P-P}$	200	-	1600	mV_{PP}
Input Differential Impedance	Z_{IN}	90	100	110	Ω
Differential Date Output Swing	V_{out}	200	-	1000	mV
Output Differential Impedance	Z_D	90	100	110	Ω

Notes:

1. Maximum total power value is specified across the full operational temperature and voltage range when CDRs are locked or a lack of input signal results in squelch being activated. If incorrect frequencies cause the CDRs to continuously attempt to lock, maximum power dissipation may reach 4.5 W.
2. ± 100ppm
3. BER=10-12; PRBS 231-1@25.78125Gbps.

Optical Characteristics (EOL, T_{OP} = 0 to 70°C, V_{CC} = 3.135 to 3.465 Volts)

Optical characteristics are dependent on data rate and protocol. Ethernet 100GBASE-SR4, OTU4, and 128G Fibre Channel optical characteristics are as follows:

100GBASE-SR4 Ethernet Operation

Parameter	Symbol	Min.	Typical	Max.	Unit	Notes
Transmitter (Module Input)						
Signaling Speed per Lane	25.78125 ± 100ppm				Gb/s	1
Center wavelength		840	-	860	nm	
RMS Spectral Width	SW	-	-	0.6	nm	
Average Launch Power per Lane	TXPx	-8.4	-	2.4	dBm	
Transmit OMA per Lane	TxOMA	-6.4	-	3	dBm	
Launch Power [OMA] minus TDEC per Lane	P-TDEC	-7.3	-		dBm	
TDEC per Lane	TDEC	-	-	4.3	dBm	
Optical Extinction Ratio	ER	2	-		dB	
Receiver (Module Output)						
Signaling Speed per Lane	25.78125 ± 100ppm				GBd	2
Center wavelength		840	-	860	nm	
Average Receive Power per Lane	RXPx	-10.3	-	2.4	dBm	3
Receiver Reflectance	Rfl	-	-	-12	dB	
Stressed Receiver Sensitivity (OMA) per Lane	SRS	-	-	-5.2	dBm	
Receiver (Module Output)						
LOS De-Assert	LOSD	-	-	-12	dBm	
LOS Assert	LOSA	-30	-	-	dBm	
LOS Hysteresis		0.5	2	-	dB	

Note:

1. Transmitter consists of 4 lasers operating at a maximum speed of 25.78125Gb/s ±100ppm each.
2. Receiver consists of 4 photodetectors operating at a maximum speed of 25.78125Gb/s ±100ppm each.
3. Minimum value is informative only and not the principal indicator of signal strength.
4. Hit Ratio 5 x 10^{-5} hits/sample.

OUT4 and 128G Fiber Channel Ethernet Operation

Parameter	Symbol	Min.	Typical	Max.	Unit	Notes
Transmitter (Module Input)						
Signaling Speed per Lane	27.95~28.05				Gb/s	4

Center wavelength		840	-	860	nm	
RMS Spectral Width	SW	-	-	0.6	nm	
Average Launch Power per Lane	TXPx	-9	-	2.4	dBm	
Transmit OMA per Lane	TxOMA	-7.1	-	3	dBm	
Launch Power [OMA] minus TDEC per Lane	P-TDEC	-8.0	-		dBm	
TDEC per Lane	TDEC	-	-	5.0	dBm	
Optical Extinction Ratio	ER	3	-		dB	
Receiver (Module Output)						
Signaling Speed per Lane	27.95~28.05				GBd	5
Center wavelength		840	-	860	nm	
Average Receive Power per Lane	RXPx	-10.9	-	2.4	dBm	6
Receiver Reflectance	Rfl	-	-	-12	dB	
Stressed Receiver Sensitivity (OMA) per Lane	SRS	-	-	-4.7	dBm	7
Receiver (Module Output)						
LOS De-Assert	LOSD	-	-	-13	dBm	
LOS Assert	LOSA	-30	-	-	dBm	
LOS Hysteresis		0.5	2	-	dB	

Pin Description

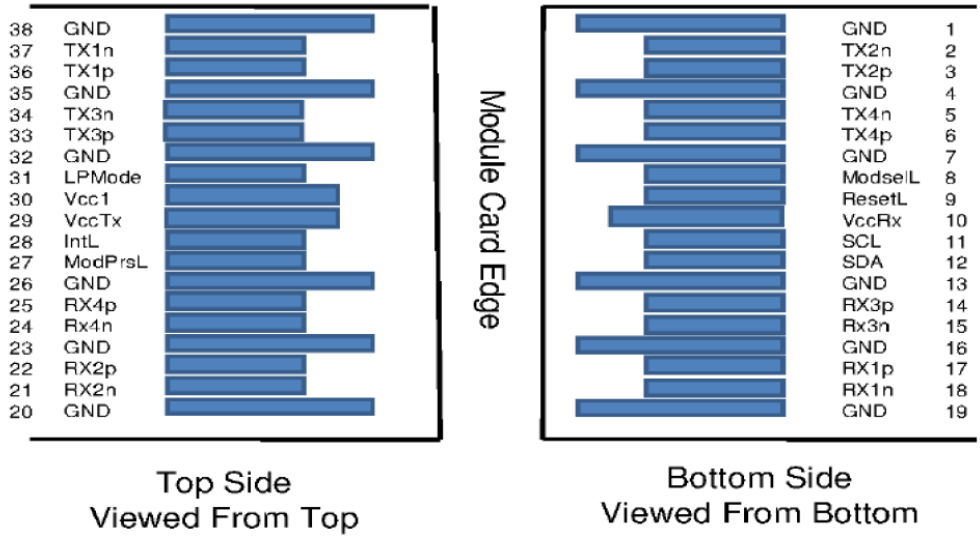

Optinet Technology Co., Ltd
Add: 4th Floor Xiufeng Industrial Park, Buji Street, Longgang District, Shenzhen,China 518112
Tel: +86-755-28471034 Fax:+86-755-61824579
www.optinetec.com sales@optinetec.com

Optical Interface

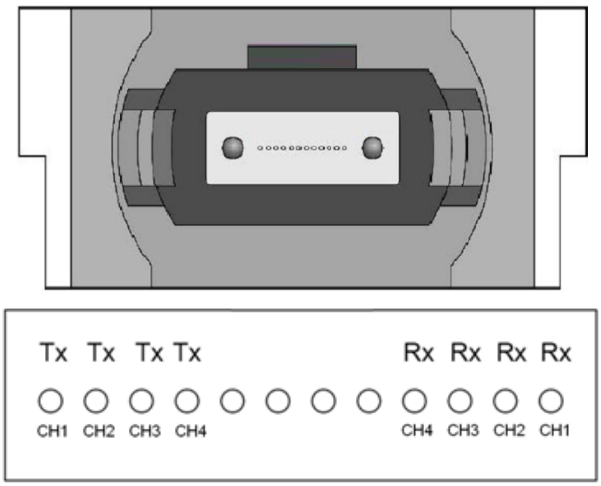

Monitoring Specification

2-Wire Serial Address 1010000x
Lower Page 00h
0 Identifier
1- 2 Status
3- 21 Interrupt Flags
22- 33 Free Side Device Monitors
34- 81 Channel Monitors
82- 85 Reserved
86- 98 Control
99 Reserved
100-104 Hardware Interrupt Pin Masks
105-106 Vendor Specific
107 Reserved
108-110 Free Side Device Properties
111-112 Assigned for use by PCI Express
113 Free Side Device Properties
114-118 Reserved
119-122 Password Change Entry Area (Optional)
123-126 Password Entry Area (Optional)
127 Page Select Byte

Upper Page 00h	**Optional Page 01h**	**Optional Page 02h**	**Optional Page 03h**
128 Identifier	128 CC_APPS	128-255 User EEPROM Data	128-175 Free Side Device Thresholds
129-191 Base ID Fields	129 AST Table Length (TL)		
	130-131 Application Code Entry 0		
	132-133 Application Code Entry 1		
	134-253 other entries		
192-223 Extended ID			176-223 Channel Thresholds
224-255 Vendor Specific ID			224 Tx EQ & Rx Emphasis Magnitude ID
			225 RX output amplitude indicators
			226-241 Channel Controls
			242-251 Channel Monitor Masks
	254-255 Application Code Entry TL		252-255 Reserved

Optinet Technology Co., Ltd
Add: 4th Floor Xiufeng Industrial Park, Buji Street, Longgang District, Shenzhen,China 518112
Tel: +86-755-28471034 Fax:+86-755-61824579
www.optinetec.com sales@optinetec.com

Mechanical Dimension

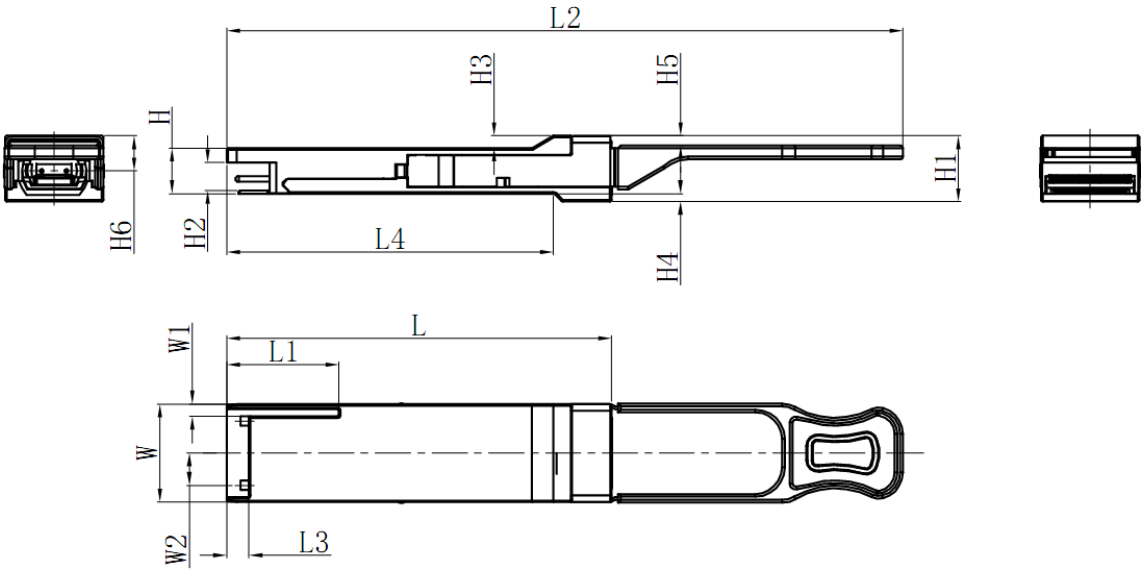

Order Information

Part No.	Data Rate	Laser	Fiber Type	Distance	Optical Interface	Temp	DDMI
OP-QSFP28-SR4	103.1~112Gbps	VCSEL	MMF	70m@OM3 100m@OM4	MPO	0~70℃	Y

Warnings

Handling Precautions: This device is susceptible to damage as a result of electrostatic discharge (ESD). A static free environment is highly recommended. Follow guidelines according to proper ESD procedures.

Laser Safety: Radiation emitted by laser devices can be dangerous to human eyes. Avoid eye exposure to direct or indirect radiation.